Tee BSP male-male-male adjustable forge

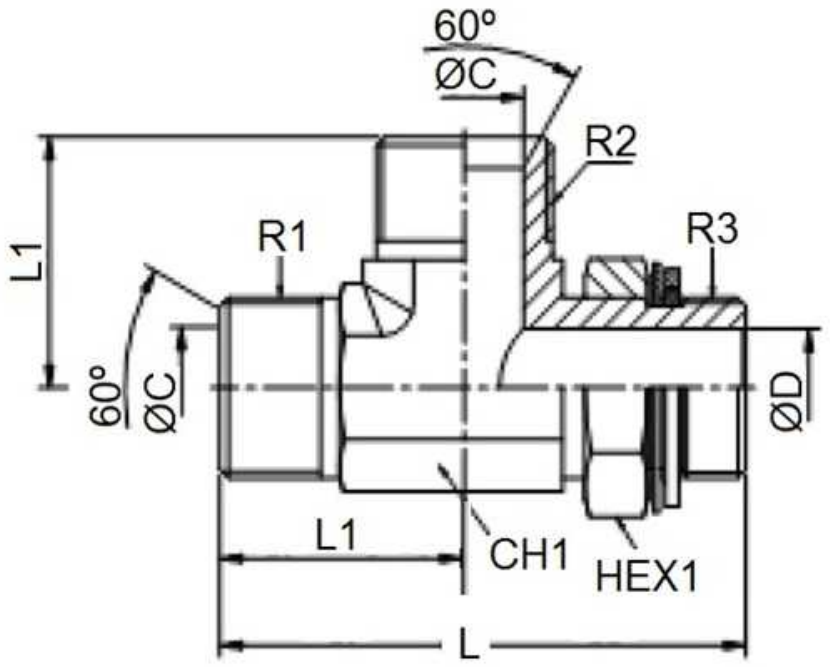

Part nº	R1	R2	R3	L	L1	HEX 1	CH1	ØC	ØD
S12290404	1/4" BSP	1/4" BSP	1/4" BSP	58,5	27	19	14	4,7	7,5
S12290606	3/8" BSP	3/8" BSP	3/8" BSP	66	29	22	19	7,9	9,9
S12290806	1/2" BSP	3/8" BSP	1/2" BSP	74	34	22	22	11,1	9,9
S12290808	1/2" BSP	1/2" BSP	1/2" BSP	77	34	27	22	11,1	12,3
S12291208	3/4" BSP	1/2" BSP	3/4" BSP	87	41	27	27	16,7	12,3
S12291212	3/4" BSP	3/4" BSP	3/4" BSP	91	41	32	27	16,7	15,5
S12291612	1" BSP	3/4" BSP	1" BSP	98	46	32	33	22,2	15,5
S12291616	1" BSP	1" BSP	1" BSP	99	46	41	33	22,2	21,5
S12292020	1"1/4 BSP	1"1/4 BSP	1"1/4 BSP	109	51	50	41	28,6	27,5

The information gathered in this technical documentation (Catalogue) has an informative character and can be modified without previous notice. DICSA will not accept any type of responsibility resulting from an inappropriate use of the product, except the ones related to manufacturing defects.