Straight bulkhead adaptor without nuts (60º)

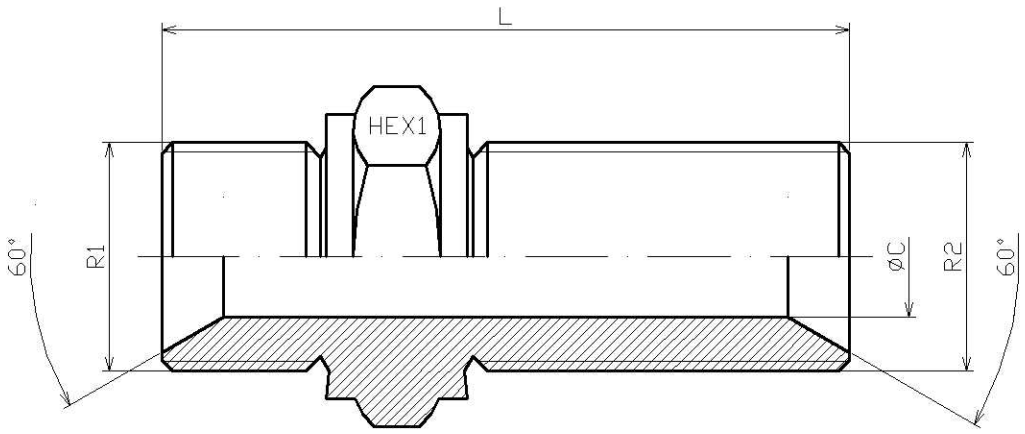

Part nº	R1	R2	L	HEX 1	ØC
A116004	1/4" BSP	1/4" BSP	47	17	4,7
A116006	3/8" BSP	3/8" BSP	53	22	7,9
A116008	1/2" BSP	1/2" BSP	59,5	27	11,1
A116012	3/4" BSP	3/4" BSP	64,5	32	16,7
A116016	1" BSP	1" BSP	73	41	22,2
A116020	1"1/4 BSP	1"1/4 BSP	80	50	28,6
A116024	1"1/2 BSP	1"1/2 BSP	89	55	33,3

The information gathered in this technical documentation (Catalogue) has an informative character and can be modified without previous notice. DICSA will not accept any type of responsibility resulting from an inappropriate use of the product, except the ones related to manufacturing defects.

Counter nut for bulkhead screw-joints

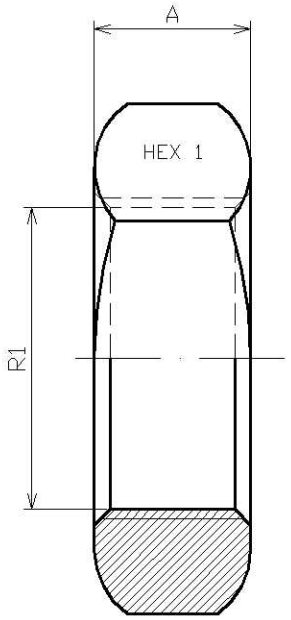

Part nº	R1	HEX 1	A
A127204	1/4" BSP	17	6
A127206	3/8" BSP	22	7
A127208	1/2" BSP	27	8
A127212	3/4" BSP	32	9
A127216	1" BSP	41	10
A127220	1'' 1/4 BSP	50	13
A127224	1'' 1/2 BSP	55	15

The information gathered in this technical documentation (Catalogue) has an informative character and can be modified without previous notice. DICSA will not accept any type of responsibility resulting from an inappropriate use of the product, except the ones related to manufacturing defects.